Laser Diode LT-LD-405-1W-P

LT-LD-405-1W-P is a multimode laser diode with 1W CW output power at 405nm. It is supplied in a 5.6mm floating mounted TO. The laser diode is suitable for the use in various opto-electronic applications.

■ Absolute Maximum Ratings (Tc=25℃)

Parameter	Symbol	Value	Unit
Optical Output Power	P_o	1.1	W
Reverse Voltage	V_{rl}	2	V
Operating Case Temperature	T_c	0～+30	℃
Storage Temperature	T_{stg}	-40～+85	℃
Soldering temperatur	T_{sld}	350	℃

■ Initial Electrical/Optical Characteristics (Tc=25℃)

Parameter		Symbol	Condition	Min	Typ.	Max	Unit
Threshold Current		I_{th}	-	-	125	200	mA
Operating Current		I_{op}	P_o=1W	-	625	750	mA
Operating Voltage		V_{op}		-	5	6	V
Dominant Wavelength		λ_d		400	(405)	410	nm
Half Intensity Angle	Parallel	θ∥		-	16	-	°
	Perpendicular	θ⊥		32	40	48	°
Differential Efficency		ηd	$\frac{800mW}{I(1000mW)-I(200mW)}$	1.5	2.0	-	W/A

() are reference figures.

* Full width angle at l/e2 of peak intensity

Tel: +86 136 8264 1046
E-mail: lasertree@micost-optotech.com

■ Outline Dimension (Unit:mm)

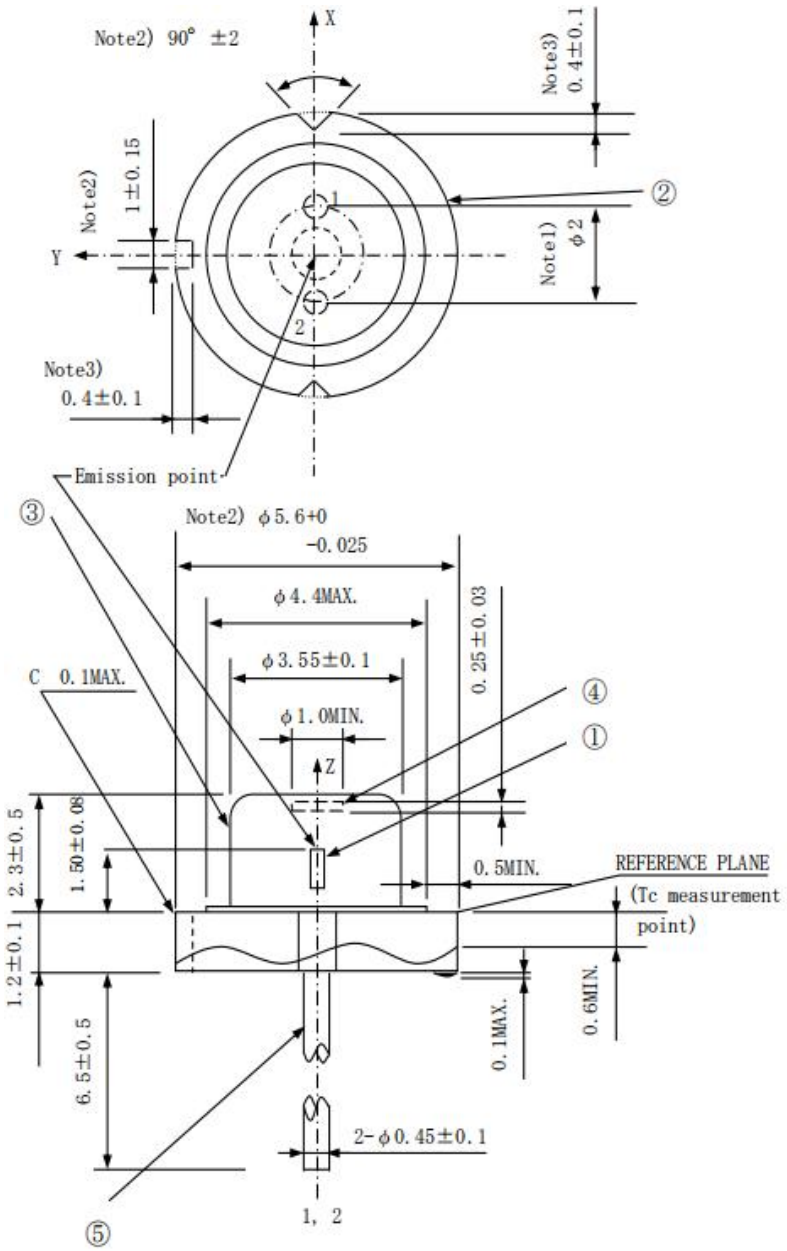

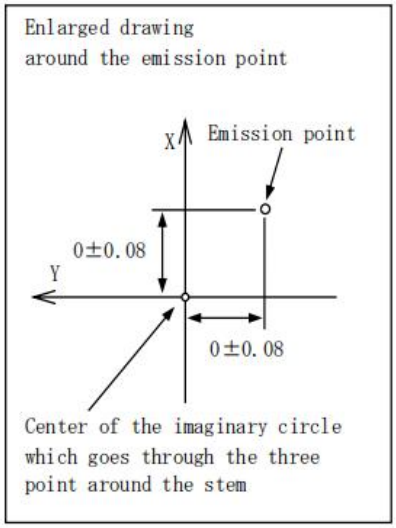

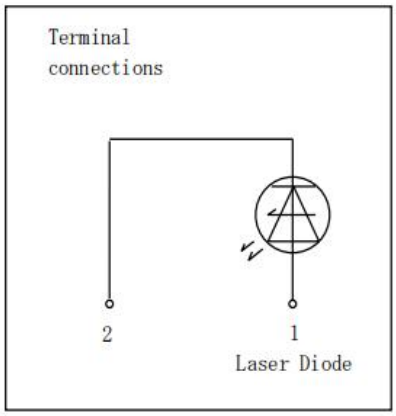

Tel: +86 136 8264 1046
E-mail: lasertree@micost-optotech.com

Cautions

1. Laser light can damage the human eye and skin. Do not expose the eye and skin to any laser light directly or through optical lenses. Focused laser beam through optical instruments will increase the chance of eye hazard.
2. The laser needs a stable driver to avoid surges. The instantaneous reverse current and reverse voltage should not exceed the absolute maximum ratings, otherwise it will damage the laser diode.
3. Semiconductor lasers are sensitive to temperature, working at high temperatures will reduce the photoelectric conversion efficiency and accelerate the aging of laser diode. It should be used under adequate heat dissipation or cooling conditions.
4. The laser should be used at the rated current and rated power, the output power is too high will accelerate the aging of laser diode.
5. Semiconductor lasers are electrostatic sensitive devices, anti-static measures should be taken during storage and transportation.
6. Lasers should be stored or work in a dry, ventilated environment to prevent damage to the laser from condensation.
7. The light emitting surface (cavity surface) is the key parts of the laser diode, any handling to damage the cavity surface should be strictly prohibited. It should be ensured that the laser diode is not contaminated, and damaged in mechanical.